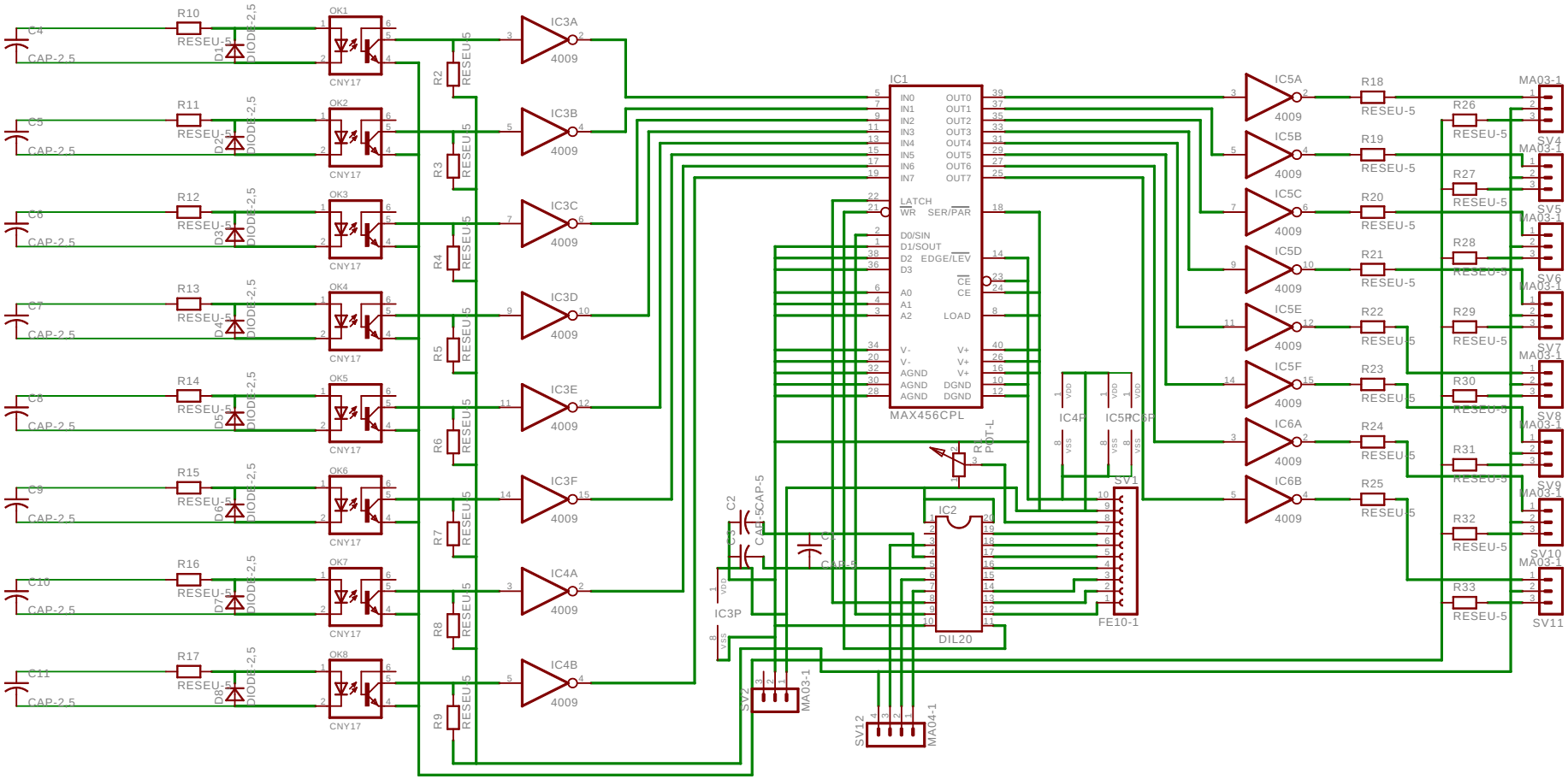
C4
CAP-2,5
R10
RESEU-5
D1
DIODE-2,5
OK1
CNY17
C5
CAP-2,5
R11
RESEU-5
D2
DIODE-2,5
OK2
CNY17
C6
CAP-2,5
R12
RESEU-5
D3
DIODE-2,5
OK3
CNY17
C7
CAP-2,5
R13
RESEU-5
D4
DIODE-2,5
OK4
CNY17
C8
CAP-2,5
R14
RESEU-5
D5
DIODE-2,5
OK5
CNY17
C9
CAP-2,5
R15
RESEU-5
D6
DIODE-2,5
OK6
CNY17
C10
CAP-2,5
R16
RESEU-5
D7
DIODE-2,5
OK7
CNY17
C11
CAP-2,5
R17
RESEU-5
D8
DIODE-2,5
OK8
CNY17
R2
R3
R4
R5
R6
R7
R8
R9
RESEU-5
IC3A
IC3B
IC3C
IC3D
IC3E
IC3F
IC4A
IC4B
4009
IC1
MAX456CPL
IN0
IN1
IN2
IN3
IN4
IN5
IN6
IN7
OUT0
OUT1
OUT2
OUT3
OUT4
OUT5
OUT6
OUT7
LATCH
WR
SER/PAR
D0/SIN
D1/SOUT
D2
EDGE/LEV
D3
CE
A0
A1
A2
LOAD
V-
V-
AGND
AGND
AGND
V+
V+
V+
DGND
DGND
R1
POT-L
IC2
DIL20
C2
CAP-5
C3
CAP-5
C1
CAP-5
IC3P
SV2
MA03-1
SV12
MA04-1
IC4P
IC5P
IC6P
SV1
FE10-1
IC5A
IC5B
IC5C
IC5D
IC5E
IC5F
IC6A
IC6B
R18
R19
R20
R21
R22
R23
R24
R25
R26
R27
R28
R29
R30
R31
R32
R33
MA03-1
SV4
SV5
SV6
SV7
SV8
SV9
SV10
SV11